INSTALLATION & OPERATING INSTRUCTIONS

Product Name: ELITE X

General information

- This luminaire must be installed in accordance with the latest edition of the IET Wiring Regulations and local Building Regulation by a qualified competent person.
- The mains power supply must be turned off before inspection, installation or removal of the luminaire, ensuring that the supply is locked off to prevent inadvertently switching the supply on.
- It is the installer's responsibility to ensure that the installation is suitable for the total load of the luminaire(s). The supply cable fuses/circuit breakers must be correctly rated for the electrical load and taking into account for any transient inrush currents that may occur.
- It is the installer's responsibility to ensure that the environmental operating and storage conditions are complied with and that any fire risks are considered.
- Do not perform insulation strength or insulation resistance tests on the installation with the luminaire(s) connected, this can damage the luminaires and give erroneous readings.
- Do not loop-in supply cables at the luminaire supply terminals unless there is provision for 2-way connection at the terminals.
- The light source contained in this luminaire must only be replaced by Tamlite Lighting or an appointed service agent.
- Emergency lighting luminaires must be installed and maintained in accordance with the emergency lighting standard BS 5266-1.
- To ensure that the product warranty remains valid, the luminaire must be installed and maintained in accordance with these installation instructions and the product must not be modified in any way.

Luminaires marked with this symbol must not be covered with thermally insulating material.

This symbol on covers over light sources indicates dangerous live parts do not operate the luminaire with this cover removed.

Dimensions

	A (mm)	B (mm)	C (mm)
XELB	338	176	110

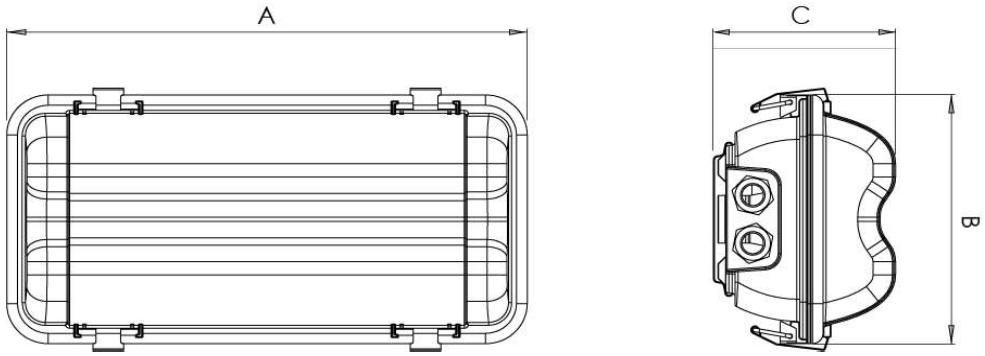

Tamlite Technical
Stafford Park 12,
Telford, Shropshire,
TF3 3BJ

+44(0)1952 292441
technical@tamlite.co.uk

Document No: **V1**

220-240V
50/60Hz

IP66

ta
-20°C to 40°C
0°C to 35°C
for M3 variants

INSTALLATION & OPERATING INSTRUCTIONS

Product Name: ELITE X

1

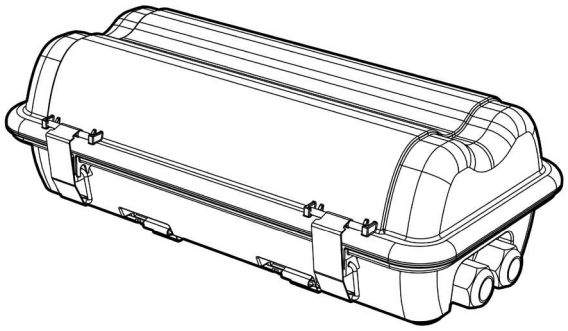

Remove the product from its packaging.

2

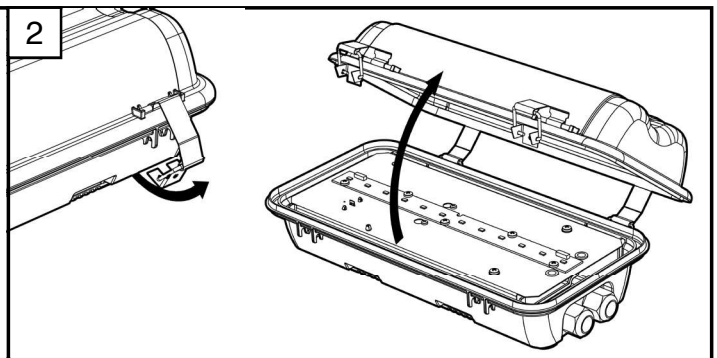

Release the buckles and remove the front diffuser.

3

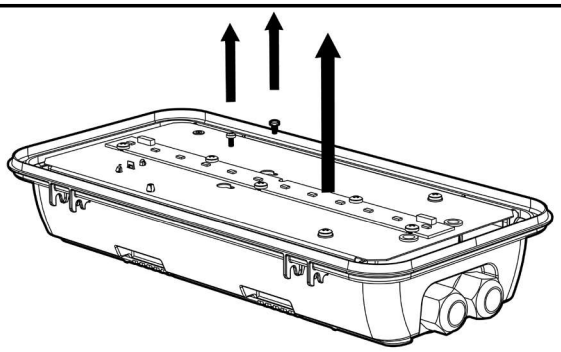

Remove the two retention screws and remove the LED gear tray.

4

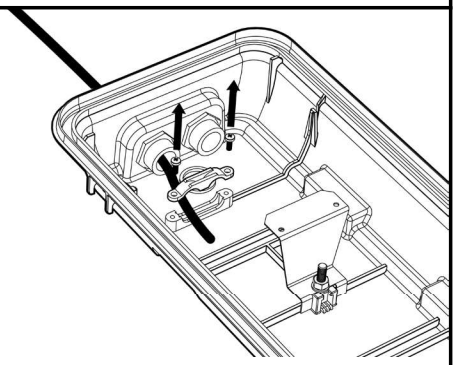

Bring supply cable through the cable gland and secure with the strain relief.

5

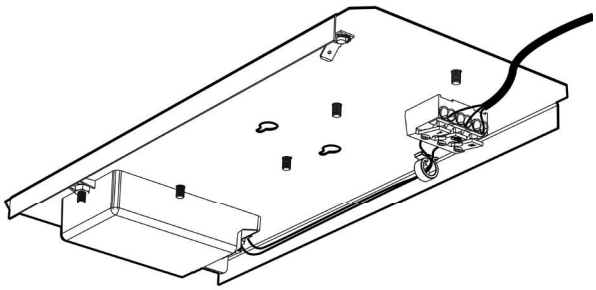

Connect supply cable to LED gear tray.

6

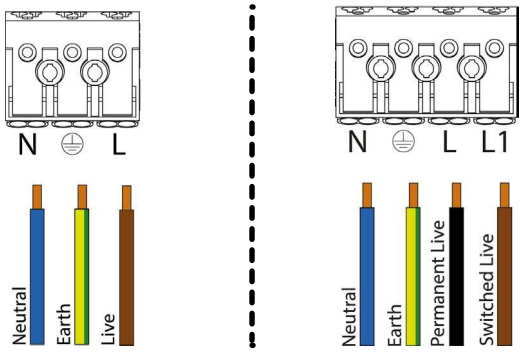

Terminations shown for standard and emergency variants.

7

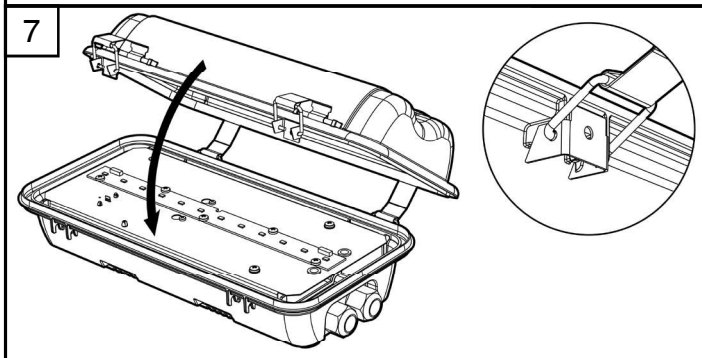

Replace diffuser and buckles.

8

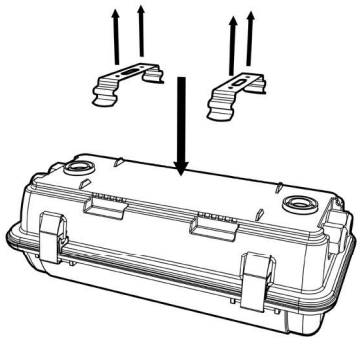

Fit the brackets to the mounting surface and clip the luminaire in to place.

Tamlite Technical
Stafford Park 12,
Telford, Shropshire,
TF3 3BJ

+44(0)1952 292441
technical@tamlite.co.uk

Document No: **V1**

220-240V
50/60Hz

IP66

ta
-20°C to 40°C
5°C to 25°C
for M3 variants